KLS9-1602D

16*2 Character Type LCD Module

Outline Dimension

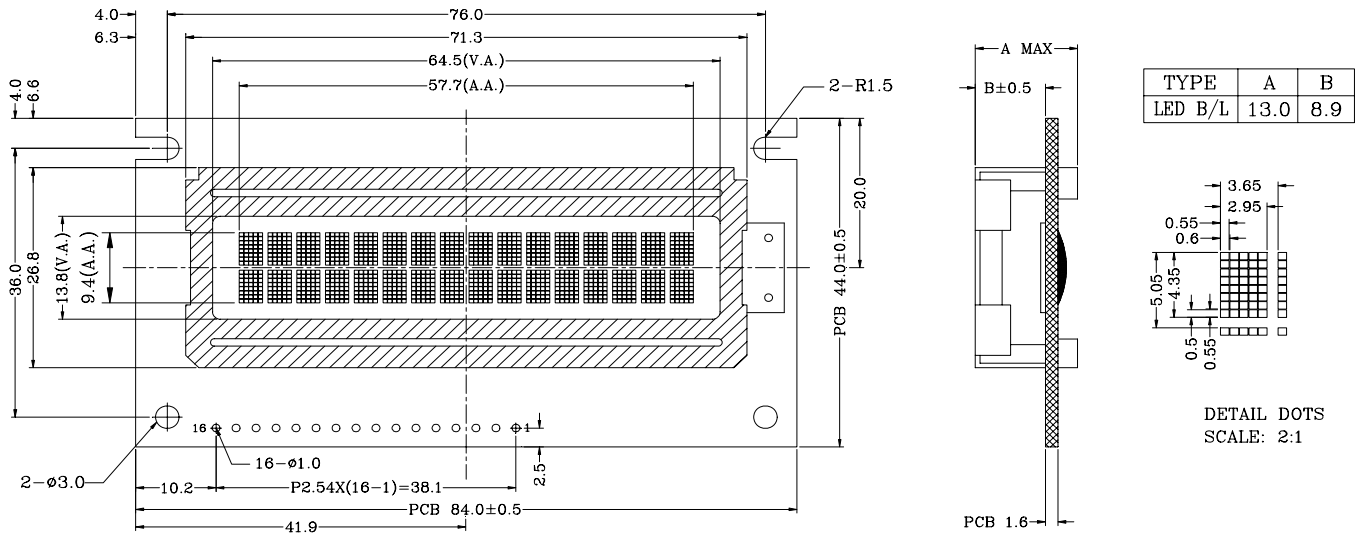

Character Type

Feature：

1、16x2 Characters
2、STN/TRANSFLECTIVE/POSITIVE/Y-G
3、Yellow-green/bottom-Backlight（LED）
4、Operating Temp.:-10℃～+60℃
5、1/16 duty cycle, 1/5 Bias
6、Built-in Controller（SPLC780D1 or equivalent）
7、Viewing angle: 6 o'clock

Absolute Maximum Rating：

Item	Symbol	Standard value			Unit
		M_{IN}	T_{YP}	M_{AX}	
Power supply for logic	V_{DD}-V_{SS}	-0.3	--	7.0	V
Input voltage	V_I	-0.3	--	VDD+0.3	V

Adjusting Display Contrast：

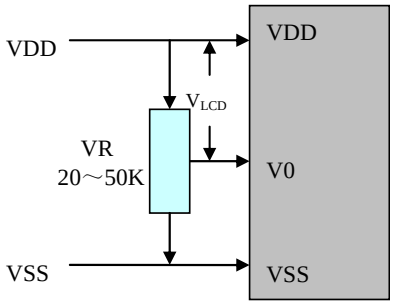

Note：Adjust V0 to VSS as an initial setting. When the module is operational, readjust V0 for optimal display appearance.

Electrical Characteristic：

(VSS=0V, Ta = 25℃)

Parameter	Symbol	Condition	M_{IN}	T_{YP}	M_{AX}	Unit
Supply voltage for logic	V_{DD}	--	4.8	5.0	5.2	V
Supply current for logic	I_{DD}	--	--	2	--	mA
Operating voltage for LCD	V_{LCD}	-10℃	--	--	--	V
		+25℃	--	5.0	--	V
		+60℃	--	--	--	V
Supply voltage for Backlight	V_{BL}	--	--	5.0	--	V
Supply current for Backlight	I_{BL}	--	--	170	--	mA

Interface Pin Connections：

Pin No.	Symbol	Level	Description
1	VSS	0V	Ground.
2	VDD	+5.0V	Supply voltage for logic operating.
3	V0	--	Adjusting voltage for LCD driving (variable).
4	RS	H/L	A signal for selecting registers: 1: Data Register (for read and write) 0: Instruction Register (for write), Busy flag-Address Counter (for read).
5	R/W	H/L	R/W = "H": Read mode. R/W = "L": Write mode.
6	E	H/L	An enable signal for writing or reading data.
7~14	DB0~DB7	H/L	8-bit bi-directional data bus.
15	A(LED+)	+5.0V	Power supply for Back light.
16	K(LED-)	0V	The backlight ground.