RJ45 with Transformer

KLS12-TL186 100Base 1x1 Tab-up RJ45

Electrical Specifications:

Insertion Loss: 1-100MHZ -1.0dB MAX
Return Loss: 1-30MHZ -16.0dB MIN
30-60MHZ -14.0dB MIN
60-80MHZ -10.0dB MIN
Cross Talk: 1-30MHZ -40.0dB MIN
30-60MHZ -35.0dB MIN
60-80MHZ -30.0dB MIN
CMR: 1M-100MHZ -35dB MIN
Hi-Pot: 1500v AC 6S 1mA
OCL:350uH MIN @ 100KHZ 100mV 8mA DC
Contacts: 0.35mm thick phos bronze plated with 6u' gold in contact area
Turn Ratio: 1CT:1CT+/-3%
Housing Material:PA66 Black
Operating temperature range:-40℃-+85℃

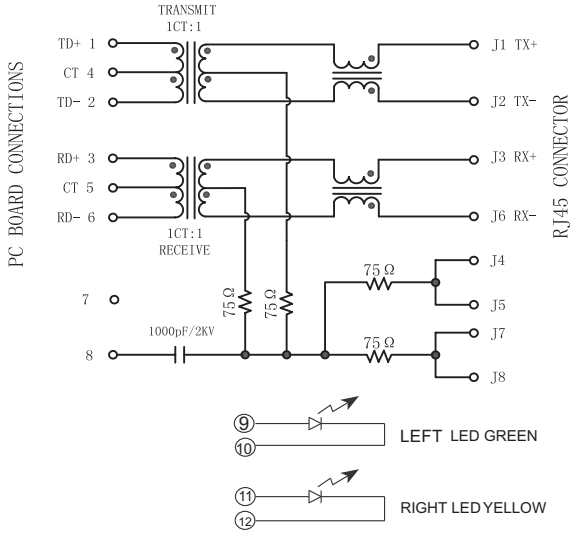

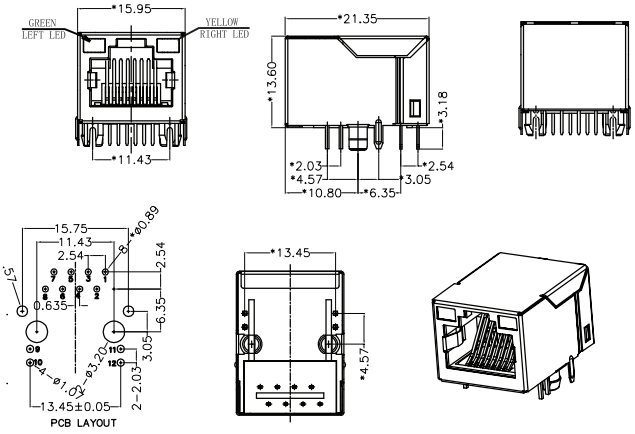

ORDER INFORMATION

L-KLS12-TL186 -1X1 - G

Part Number	Part Number	LED Style
	1X1Ports	Green/Yellow